Installation Dimension

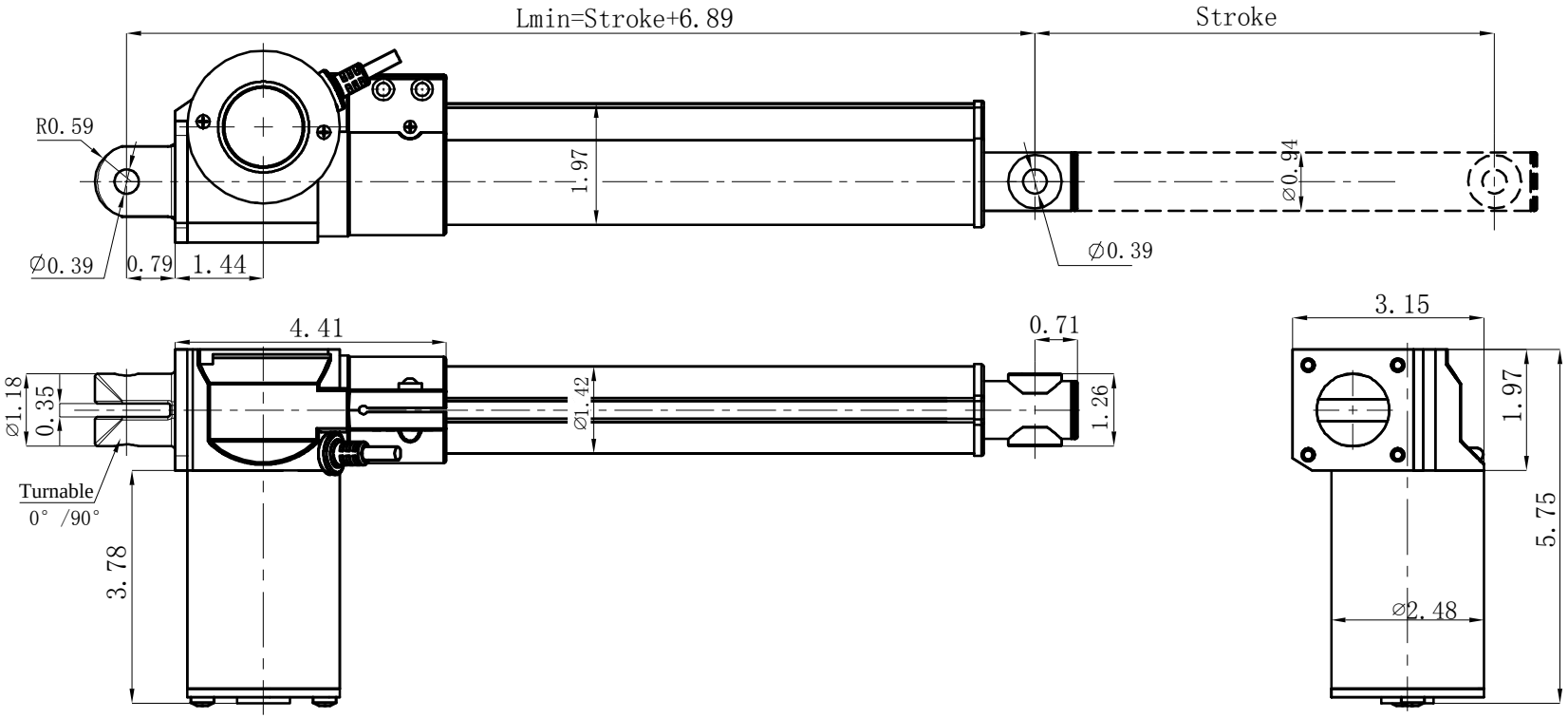

Specificatioons		
1	Input Voltage	24V DC/12V DC
2	Load Capacity	6000N
3	Speed	4～30 mm/s
4	Stroke	Customize
5	Type of duty	10%,2 min. on/18 min. off
6	Limit switches	Inner
7	Operation Temperature	-15℃～45℃
8	Protection Class	IP43

						Name	Installation Drawing	Figure Number	BM-10
						Materials		Drawing	
Sign	Amount	Modify File Number		signature	Date				
Designer			Standard			Weight		Ratio 1:3	Lay Page
Mapper									
Auditor									
Craft			Approver						

BORMAN

Wuxi Borman Transmission Technology Co., LTD