Installation Dimension

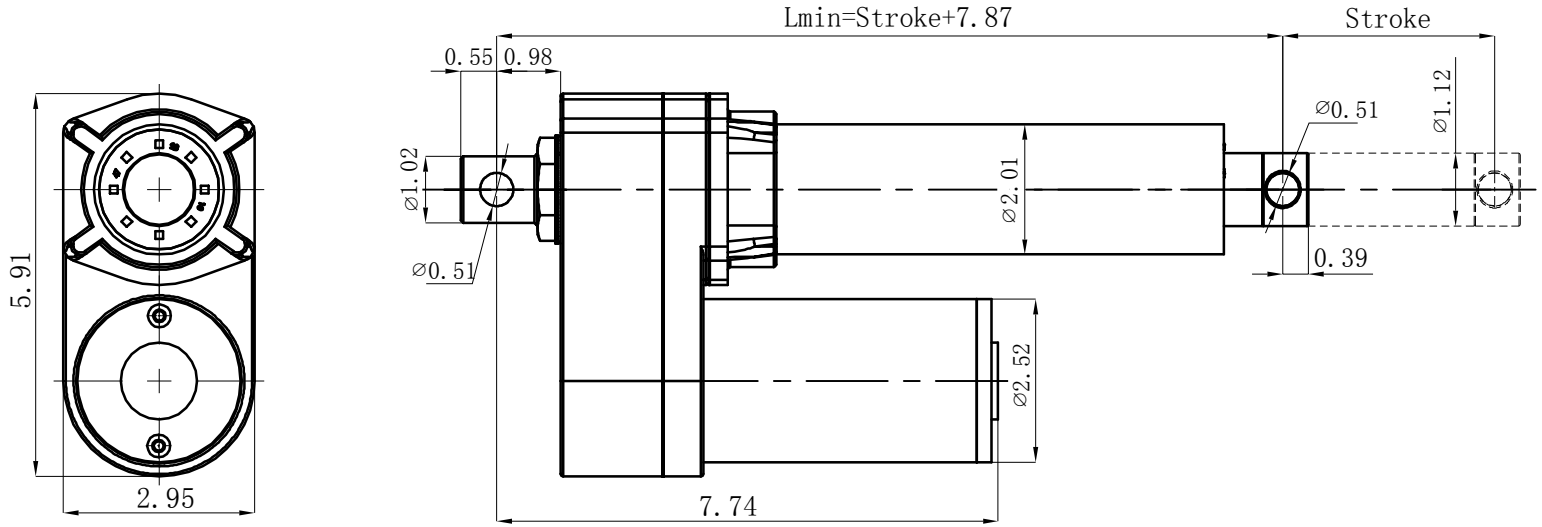

Specificatioons		
1	Input Voltage	48V/36V/24V/12V DC
2	Load Capacity	10000N
3	Max Speed	5 mm/s (7000N) 67 mm/s (750N)
4	Stroke	Customize
5	Type of duty	10%,2 min. on/18 min. off
6	Limit switches	Inner
7	Operation Temperature	-15℃～45℃
8	Color	Black or Gray
9	Protection Class	IP65

					Name	Installation Drawing		Figure Number	BM-H2
Sign	Amount	Modify File Number	Signature	Date	Materials			Drawing	
Designer			Standard		Weight		Ratio	1:3	Lay / Page
Mapper									
Auditor									
Craft			Approver						

Wuxi Borman Transmission Technology Co., LTD