Installation Dimension

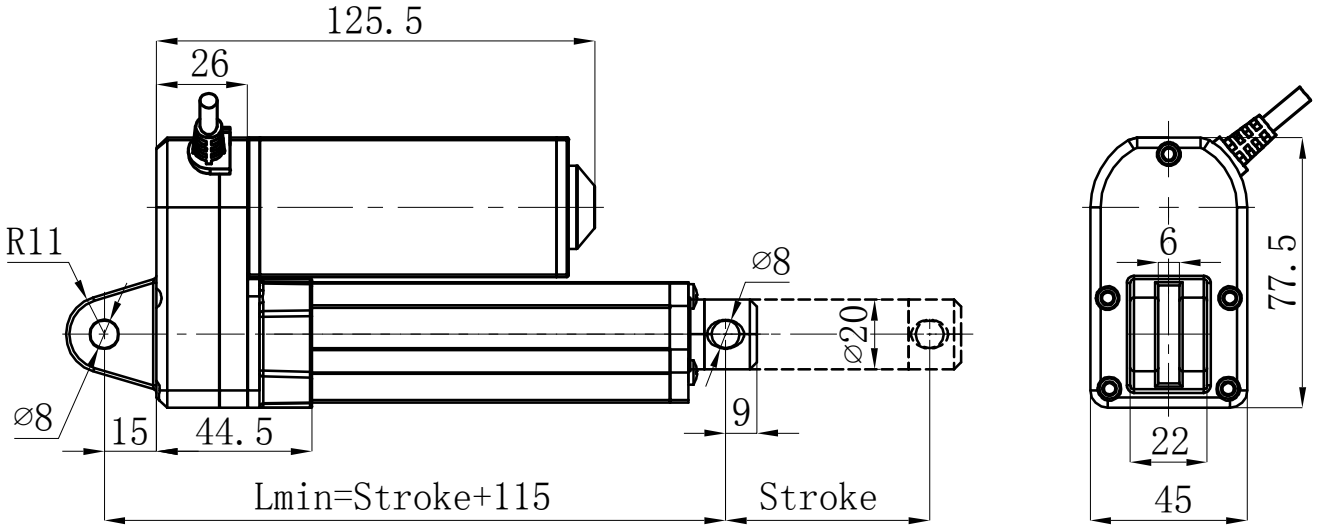

Specificatioons		
1	Input Voltage	48V/36V/24V/12V DC
2	Load Capacity	2500N
3	Speed	7～70 mm/s
4	Stroke	Customize
5	Type of duty	10%,2 min. on/18 min. off
6	Limit switches	Inner
7	Operation Temperature	-15℃～45℃
8	Protection Class	IP65

					Name	Installation Drawing		Figure Number	**BM-S2**
Sign	Amount	Modify File Number	Signature	Date	Materials			Drawing	
Designer			Standard		Weight		Ratio	1:3	Lay Page
Mapper									
Auditor									
Craft			Approver						

BORMAN

Wuxi Borman Transmission Technology Co., LTD